Life Sciences

USD 2531

Pall PLT Filter Housings

Single and multi-round pharmaceutical T-style filter housings for liquid applications

*Filtration. Separation. Solution.*SM

Pall PLT Filter Housings

Sanitary single and multi-round filter housings for highest requirements

PLT filter housings have been designed in accordance with the Life Sciences industry's demand for high-quality, cost-effective products.

The PLT range is available in both single and multi-round style and the housing's design takes account of sanitary and GMP design requirements necessary for stainless steel products within the industry. They can be supplied in with a variety of different connection configurations and with two different surface finish options.

These features combine to ensure that the PLT range of housings is suitable for the widest possible range of applications.

Specification

Maximum operating pressure:	-1 to 10 barg (-14.5 to 150 psig)
Maximum operating temperature:	150 °C

Materials of Construction

Contact surfaces:	316L Stainless Steel (1.4404)
Non-wetted contact surfaces:	304 Stainless Steel (1.4301)

Surface Finish

Surface option 1:	Internal: Ra ≤ 0.38 µm (15 µin) electropolished (typical) External: Ra ≤ 0.8 µm (32 µin) electropolished (typical)
Surface option 2:	Internal: Ra ≤ 0.8 µm (32 µin) passivated External: Ra ≤ 1.2 µm (48 µin) passivated
Inspection documentation:	The housing is supplied with Housing Certificate (EN 10204 2.2 type) and manual. Enhanced documentation in CD format available as an option

Features and benefits

- Combines sanitary design and cost-effectiveness
- Meets stringent requirements in the different biopharmaceutical market segments
- Enhanced product cleanability due to crevice-free welding and sanitary design
- Suitable for SIP and CIP
- Available in two surface options:
  - Electropolished with internal Ra value ≤ 0.38 µm
  - Mechanically polished and passivated with internal Ra value ≤ 0.8 µm
- Manufactured in 1, 3 and 5-round configuration
- Available with different inlet and outlet connections
- Includes different options with quick fit 'Stäubli'*-type vent connection for easy filter integrity testing
- Operator friendly V-clamp (single-round) and V-band closure for multi-round housings
- Enhanced documentation package supplied on CD (optional)
- Suitable for use with hazardous liquids and gases in accordance with PED 97/23/EC
- Safe for use in hazardous environment in accordance with ATEX 94/9/EC Group II Category 2 (Zones 1/21 and 2/22)

Pall PLT Single-Cartridge Housings

Technical Specifications

Typical water flow vs differential pressure for PLT1*

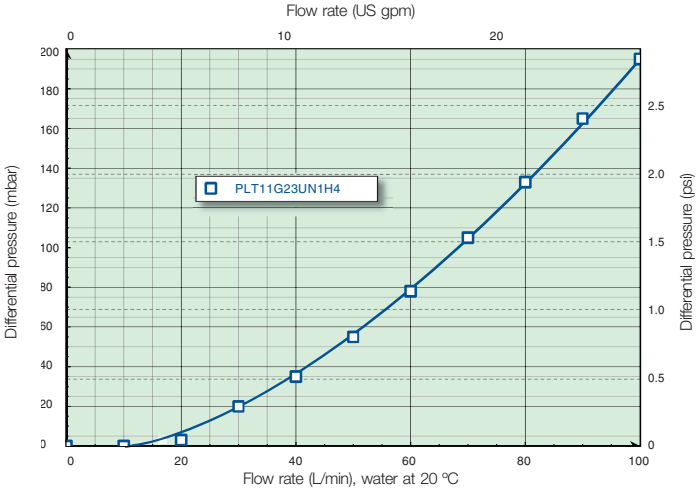

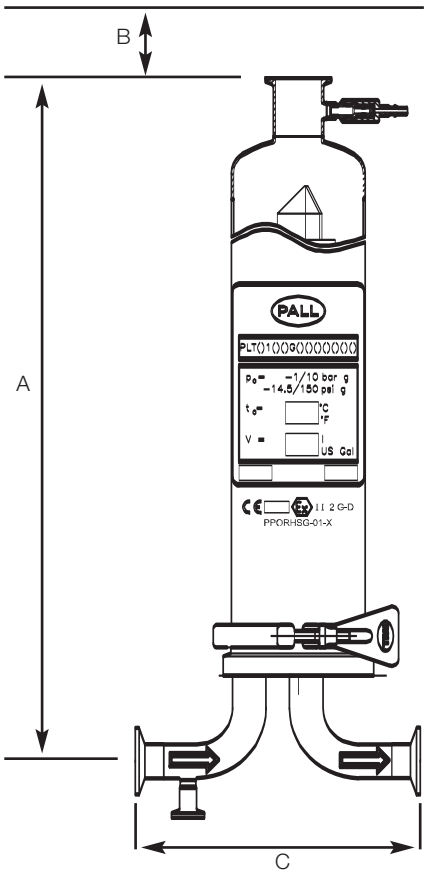

Part number: PLT1*G23PD*H4

PLT1 Housing Nominal Dimensions and Weights

Code	Cartridge Height	Dimension A	Dimension B	Dimension C	Vol (L/US Gals)	Weight (Kg/lb)
05	127 mm (5 in.)	175 mm (6.9 in.)	180 mm (7.1 in.)	215 mm (8.5 in.)	1.4/0.37	3.4/7.50
1	254 mm (10 in.)	300 mm (11.8 in.)	300 mm (11.8 in.)	215 mm (8.5 in.)	2.4/0.63	3.9/8.60
2	508 mm (20 in.)	560 mm (22.0 in.)	550 mm (21.6 in.)	215 mm (8.5 in.)	4.4/1.16	5.0/11.02
3	762 mm (30 in.)	820 mm (32.3 in.)	800 mm (31.5 in.)	215 mm (8.5 in.)	6.3/1.66	6.0/13.22

For specific dimensions please contact Pall.

Pall PLT Multi-Cartridge Housings

Technical Specifications

Typical water flow vs differential pressure for PLT3* AND PLT5*

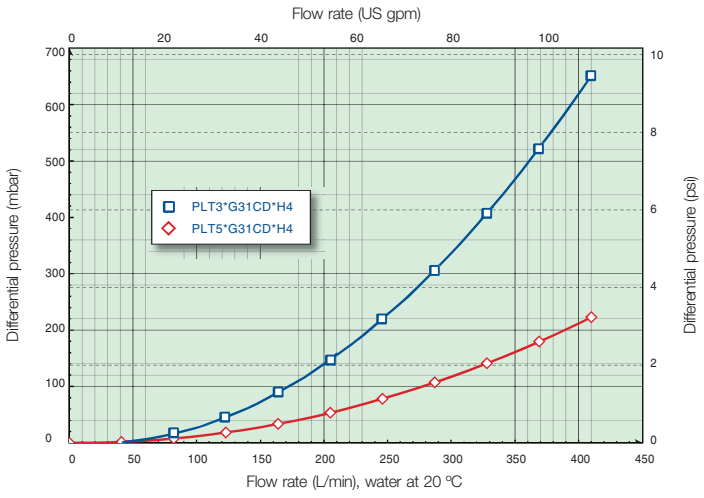

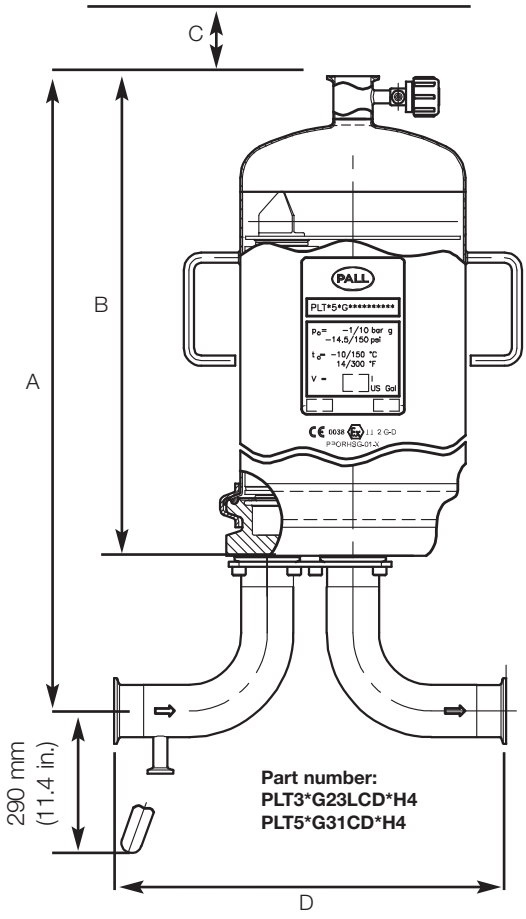

PLT3 Housing Nominal Dimensions and Weights

Code	Cartridge Height	Dimension A	Dimension B	Dimension C	Dimension D	Vol (L/US Gals)	Weight (Kg/lb)
1	254 mm (10 in.)	787 mm (31.0 in.)	382 mm (15.1 in.)	310 mm (12.2 in.)	294 mm (11.6 in.)	8.2/2.2	19.0/41.8
2	508 mm (20 in.)	1037 mm (40.8 in.)	632 mm (24.9 in.)	560 mm (22.0 in.)	294 mm (11.6 in.)	14.2/3.76	21.2/46.6
3	762 mm (30 in.)	1297 mm (51.1 in.)	892 mm (35.1 in.)	810 mm (31.9 in.)	294 mm (11.6 in.)	20.0/5.3	23.5/51.7
4	1016 mm (40 in.)	1537 mm (60.5 in.)	1132 mm (44.5 in.)	1060 mm (41.7 in.)	294 mm (11.6 in.)	26.0/6.87	25.7/56.5

PLT5 Housing Nominal Dimensions and Weights

Code	Cartridge Height	Dimension A	Dimension B	Dimension C	Dimension D	Vol (L/US Gals)	Weight (Kg/lb)
1	254 mm (10 in.)	859 mm (33.8 in.)	418 mm (16.5 in.)	310 mm (12.2 in.)	381 mm (15.0 in.)	13.7/3.6	26.9/59.0
2	508 mm (20 in.)	1110 mm (43.7 in.)	669 mm (26.4 in.)	560 mm (22.0 in.)	381 mm (15.0 in.)	22.7/6.0	29.1/64.1
3	762 mm (30 in.)	1358 mm (53.5 in.)	917 mm (36.1 in.)	810 mm (31.9 in.)	381 mm (15.0 in.)	31.8/8.4	30.4/66.8
4	1016 mm (40 in.)	1607 mm (63.3 in.)	1166 mm (45.9 in.)	1060 mm (41.7 in.)	381 mm (15.0 in.)	40.9/10.8	33.6/73.9

For specific dimensions please contact Pall.

Ordering Information

PLT1 Ordering Information

Part Number: PLT □ 1 □ G □ □ □ □ □

Code	Documentation
Blank	Housing certificate and manual
D	Fully traceable Pall standard documentation package

Code	Inlet / Outlet
23	1 in. clamp coupling
94	Butt weld 33.7 x 2.0 mm[1]

Code	Drain
D	½ in. clamp coupling
K	Hosetail valve
N	No drain
G	¼ in. BSPP coupling

Code	Seal Materials
H	Fluorocarbon
H4	Silicone
J	Ethylene propylene
H1	FEP encapsulated fluorocarbon

Code	Filter Cartridge Length
05	125 mm (5 in.)
1	254 mm (10 in.)
2	508 mm (20 in.)
3	762 mm (30 in.)

Code	Vent
P	1½ in. clamp coupling and quick release coupling
H	Quick release coupling
U	1½ in. clamp coupling
G	¼ in. BSPP coupling

Code	Surface Finish Grades[2]
1	Electropolished
3	Passivated

[1] No drain option available,
[2] Not all vent and drain connections are supplied with all surface finish options.

Example Part Number: PLT105G23PD1H4

PLT1 Accessories and Spares

Description	Part Number	Qty	Material
Housing seal	GK1242PH01	1	Fluorocarbon
	GK1242QL01	1	Silicone
	GK1242PX01	1	Ethylene propylene
	ACS0523EC	1	FEP encapsulated fluorocarbon
Housing clamp	ACS0942DA	1	304 Stainless Steel
Pressure gauge kit	ACS0457FA	1	-
Valve body Staubli*	1C18962C00	1	Nitronic 60
Valve body hosetail	1C18961C00	1	Nitronic 60
Valve gasket kit	ACS0718EU	10	Silicone
Valve gasket kit	ACS0719EX	10	EPR
Ball valve ¼ in. BSPT / hosetail	SAN1DV04H2	1	316 Stainless steel

PLT3 Ordering Information

Part Number: PLT □ 3 □ G □ □ □ □

Code	Documentation
Blank	Housing certificate and manual
D	Fully traceable Pall standard documentation package

Code	Inlet / Outlet
23L	1½ in. clamp coupling
31	2 in. clamp coupling
94	Butt weld 33.7 x 2.0 mm[1]

Code	Drain
B	Hosetail valve
D	½ in. clamp coupling
L	Butt weld 12.7 x 1.6 mm
N	No drain

Code	Seal Materials
H	Fluorocarbon
H4	Silicone
H11D	Kalrez**
J	Ethylene propylene

Code	Filter Cartridge Length
1	254 mm (10 in.)
2	508 mm (20 in.)
3	762 mm (30 in.)
4	1016mm (40 in.)

Code	Vent
A	Quick release valve
C	1½ in. clamp coupling with quick release valve
J	Butt weld 25.4 x 1.6 mm
N	No vent
Y	1 in. clamp coupling

Code	Surface Finish Grades[2]
1	Electropolished
3	Passivated

[1] No drain option available,
[2] Not all vent and drain connections are supplied with all surface finish options.

Example Part Number: PLT33G31AB3H

PLT5 Ordering Information

Part Number: PLT □ 5 □ G □ □ □ □

Code	Documentation
Blank	Housing certificate and manual
D	Fully traceable Pall standard documentation package

Code	Inlet / Outlet
23L	1½ in. clamp coupling
31	2 in. clamp coupling
95	Butt weld 60.3 x 2.3 mm

Code	Drain
B	Hosetail valve
D	½ in. clamp coupling
L	Butt weld 12.7 x 1.6 mm[1]
N	No drain

Code	Seal Materials
H	Fluorocarbon
H4	Silicone
H11D	Kalrez**
J	Ethylene Propylene

Code	Filter Cartridge Length
1	254 mm (10 in.)
2	508 mm (20 in.)
3	762 mm (30 in.)
4	1016mm (40 in.)

Code	Vent
A	Quick release valve
C	1½ in. clamp coupling with quick release valve
J	Butt weld 25.4 x 1.6 mm
N	No vent
Y	1 in. clamp coupling

Code	Surface Finish Grades[2]
1	Electropolished
3	Passivated

[1] No drain option available,
[2] Not all vent and drain connections are supplied with all surface finish options.

Example Part Number: PLTD53G31CL1J

PLT3 Accessories and Spares

Description	Part Number	Qty	Material
Housing seal	CA67404	1	Silicone
	CA67405	1	Fluorocarbon
	LS00275	1	Ethylene propylene
Inlet/outlet elbow gasket†	LS00097	1	Silicone
	LS00149	1	Fluorocarbon
	LS00098	1	Ethylene propylene
Housing clamp	ACS0925DM	1	304 Stainless Steel
Pressure gauge kit	ACS0457FA	1	-
Valve gasket kit	ACS0602EM	10	Silicone, Teflon
Valve gasket kit	ACS0605EM	10	EPR, Teflon

† *2 required per housing.*

PLT5 Accessories and Spares

Description	Part Number	Qty	Material
Housing seal	ORH4W-676	1	Silicone
	ORHP-676	1	Fluorocarbon
	ORJP-676	1	Ethylene propylene
Inlet/outlet elbow gasket†	LS00100	1	Silicone
	LS00167	1	Fluorocarbon
	LS00101	1	Ethylene propylene
Housing clamp	ACS0922DM	1	304 Stainless Steel
Pressure gauge kit	ACS0457FA	1	-
Valve gasket kit	ACS0602EM	10	Silicone, Teflon
Valve gasket kit	ACS0605EM	10	EPR, Teflon

† *2 required per housing.*

PALL Life Sciences

New York - USA
+1 516 484 5400 phone
+1 516 801 9548 fax
biotech@pall.com e-mail

Portsmouth - Europe
+44 (0)23 9230 3303 phone
+44 (0)23 9230 2506 fax
BioPharmUK@europe.pall.com e-mail

*Filtration. Separation. Solution.*SM

Visit us on the web at www.pall.com/biopharmaceutical

International Offices
Pall Corporation has offices and plants throughout the world in locations such as: Argentina, Australia, Austria, Belgium, Brazil, Canada, China, France, Germany, Hong Kong, India, Indonesia, Ireland, Italy, Japan, Korea, Malaysia, Mexico, the Netherlands, New Zealand, Norway, Poland, Puerto Rico, Russia, Singapore, South Africa, Spain, Sweden, Switzerland, Taiwan, Thailand, the United Kingdom, the United States and Venezuela.
Distributors are located in all major industrial areas of the world.

The information provided in this literature was reviewed for accuracy at the time of publication. Product data may be subject to change without notice. For current information consult your local Pall distributor or contact Pall directly. Part numbers quoted are protected by the copyright of Pall Corporation

© 2008, Pall Corporation. PALL, and Pall are trademarks of Pall Corporation. ® indicates a trademark registered in the USA. ***Filtration. Separation. Solution.*** is a service mark of Pall Corporation. Stäubli is a trademark of Stäubli AG. Kalrez is a registered trademark of DuPont Performance Elastomers.

PELWR/MG/08.08/GN08.2357